City of St. Joseph

Permit # _____

Engineering Department

700 Broad Street, St. Joseph, Mi 49085

Phone: (269) 983-5541

Fax: (269) 985-0346

RIGHT-OF-WAY USE APPLICATION AND PERMIT FORM

PERMIT TO CONSTRUCT, OPERATE, USE AND/OR PERFORM MAINTENANCE, WITHIN THE CITY RIGHT-OF-WAY

APPLICATION FORM

APPLICANT: This form acts as an application for the Right of Way (ROW) permit. It must be completely filled out before it will be reviewed. If approved, this form becomes the official ROW permit for the work described herein . If Owner hires a contractor to perform work, the contractor shall asume responsibility for the all permit provisions and requirements. Applicant must contact MISS DIG Systems Inc. (Dial 811) as required by state law.

A: RIGHT-OF-WAY INFORMATION (Please print in Ink or Type)	
ADDRESS OF PROPOSED WORK/ACTIVITY:	

OWNER:							
NAME:		MAILING ADDRESS:					
CITY:		STATE:		ZIP:		EMAIL:	
TELEPHONE:		CELL:				FAX:	

APPLICANT/CONTRACTOR:							
NAME:		MAILING ADDRESS:				CONTACT NAME:	
CITY:		STATE:		ZIP:		EMAIL:	
TELEPHONE:		CELL:				FAX:	

PROPOSED START DATE:		**PROPOSED COMPLETION DATE:**	

DESCRIPTION OF WORK (Attach additional sheets as necessary):

COST OF CONSTRUCTION:	

	B: APPLICANT REQUIRED TO SUBMIT THE FOLLOWING:	VERIFICATION (OFFICE USE ONLY)
☐	SKETCH OF PLAN	☐
☐	CERTIFICATE OF LIABILITY INSURANCE WITH CITY AS CERTIFICATE HOLDER	☐
☐	150% OF CONSTRUCTION COST (MINIMUM OF $5,000) LICENSE AND PERMIT BOND OR CASHIERS-CHECK/CASH IN LIEU OF BOND	☐
☐	QUOTE AUTHORIZED BY OWNER OR COST ESTIMATE SHEET	☐

C: APPLICANT / AUTHORIZED AGENT SIGNATURE

"I, Applicant/Authorized Agent, hereby affirm that the information on this application is true to the best of my knowledge and belief. I agree to comply with all terms and conditions of the Right-Of-Way Use permit as it may be issued, and agree to pay all fees and costs that may come due as a result of any activity under the permit. I agree that the above construction or repair includes all work to restore the Right-Of-Way to an as-before or better condition and shall be in accordance with the specifications of the City of St. Joseph. The applicant further consents that if the work under this permit is not completed in the specified time period that the City of St. Joseph may do the work and charge the applicant for the cost."

SIGNATURE:		DATE:	
PRINT NAME OF APPLICANT:		TITLE:	
APPROVED BY:		DATE:	

TIM ZEBELL, CITY ENGINEER

CONTRACTOR SHALL CALL FOR A FORM INSPECTION A MINIMUM OF 24 HOURS PRIOR TO POURING CONCRETE

PERMIT EXPIRES: _____

CITY OF ST. JOSEPH SPECIFICATIONS FOR OPEN CUTTING AND EXCAVATION OF THE CITY STREETS AND SIDEWALKS

1. All work in the City Right-of-Way requires a Permit issued by the City Engineer. A permit shall be obtained forty-eight (48) hours in advance of work unless an emergency exists. Complete Right-of-Way Use Application and Permit Form.

2. All Contractors must be insured and bonded. The bonding procedure is handled in the office of the City Clerk, located at City Hall, 700 Broad St.

3. No work will commence within the Right-of-Way limits unless proper barricades with lights, are on the job site.

4. Barricades to be used shall conform to the Michigan Manual of Uniform Traffic Control Devices, Type I, II, or III. A copy of the barricade types is attached. A minimum of one (1) light, with a barricade, to be used on excavation of each eight (8) square feet of opening. The size of the opening will determine the type of barricade to be used.

5. All openings in paved surfaces shall be sawed in parallel lines or rectangles.

6. All excavation material, Class I, II, or III, as defined in the Michigan Standard Specifications of Construction.

7. All granular backfill material to be placed in 12" layers and compacted with a vibratory compactor.

8. Concrete mix to be 5 ½ - 6 bag per cubic yard unless approved otherwise by the City.

9. Restoration of street shall conform to the original street surface and subsurface conditions.

10. Restoration of the tree lawn will consist of a minimum of four (4) inches of top soil and seeded with a good quality of grass seed with 10-6-4 fertilizer.

NOTE: Any excavation involving water or sanitary sewer systems also requires a permit from the Water & Sewer Division of Public Services issued at the Inspection Department located on the ground Floor of City Hall, 700 Broad St. St. Joseph, MI 49085.

Right-Of-Way Sketch Plan Site Location: _____

(See instructions, attached)

811®

Know what's below.
Call before you dig.

RIGHT-OF-WAY USE APPLICATION and PERMIT FORM

Attachment: SKETCH PLAN

Note: A sketch plan is required for all Standard Use Right-Of-Way Permits. The applicant may use this form or attach a labeled sketch plan. The sketch plan must include the following information as pertinent to the review of the application:

1. Property lines, dimensions, and known monuments.
2. Location, dimensions and recorded easements, if applicable.
3. Location and dimensions of driveways, sidewalks, driving lanes, and parking spaces.
4. Proposed driveway grades shall be indicted both within the public right-of-way and between the property line and the front of the building.
5. Locations of existing and proposed utilities, including water, sewer, fire hydrant, electricity, gas, phone and cable TV infrastructure, if applicable.
6. Show the topography as it relates to the right-of-way construction such as adjacent slope for cut and fills, soil stabilization, or retaining walls. (Any retaining wall or system of retaining walls greater than four (4) feet must be engineered), if applicable.
7. Identify the proposed storm water management measures as related to the existing and/or proposed drainage facilities.
8. Proposed method of erosion control and soil stabilization.

1" SIDEWALK AND DRIVEWAY STANDARD

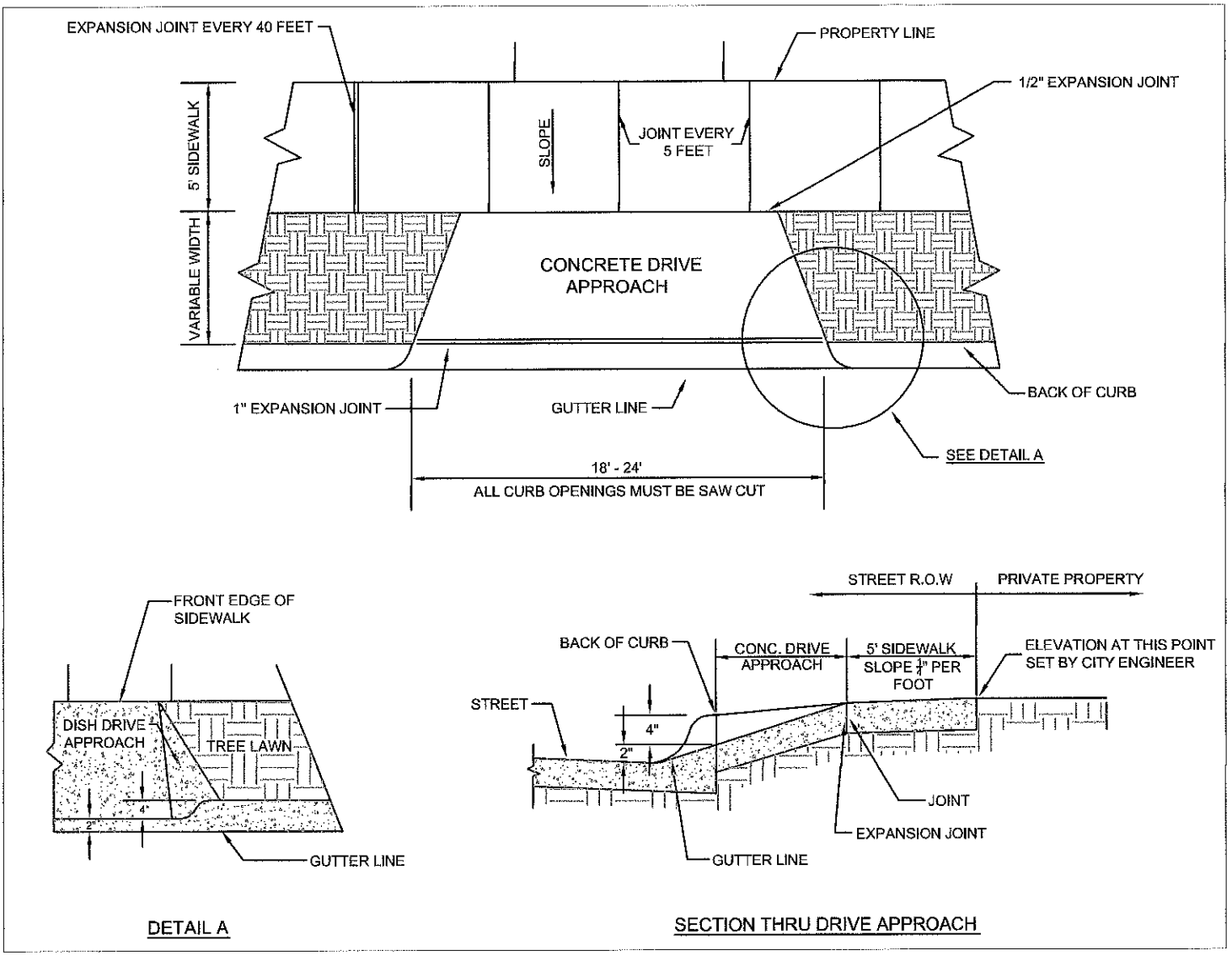

NOTES:

SIDEWALK CONCRETE SHALL BE 5 $\frac{1}{2}$ - BAG CEMENT MIX.

THE DRIVE-APPROACH AND SIDEWALK WITHIN THE DRIVE IS 6" THICK, THE REMAINING SIDEWALK IS 4" THICK.

ALL EXPANSION JOINTS SHALL BE THOROUGHLY CLEANED OF ALL CONCRETE AFTER PLACING THE CONCRETE.

FOR 6" THICK SIDEWALK: SIDEWALK AND DRIVE-APPROACH USE 2"x6" WOODEN FORMS.

FOR 4" THICK SIDEWALK: SIDEWALK AND DRIVE-APPROACH USE 2"x4" WOODEN FORMS (OR STEEL FORMS).

IF CURB AND/OR GUTTER SHALL BE REPLACED, POUR CONCRETE SEPARATE FROM THE APPROACH; THEN WHEN CONCRETE HAS SET, PLACE EXTENSION JOINT AND CONTINUE TO POUR APPROACH.

IF CONCRETE SAWING AND/OR BREAKING-OUT THE CURB AND GUTTER IS NECESSAARY, THEN THE CONTRACTOR MUST CONTACT THE CITY ENGINEERING OFFICE PRIOR TO EXCAVATION.

***Figure 6F-7. Channelizing Devices** (Sheet 1 of 2)*

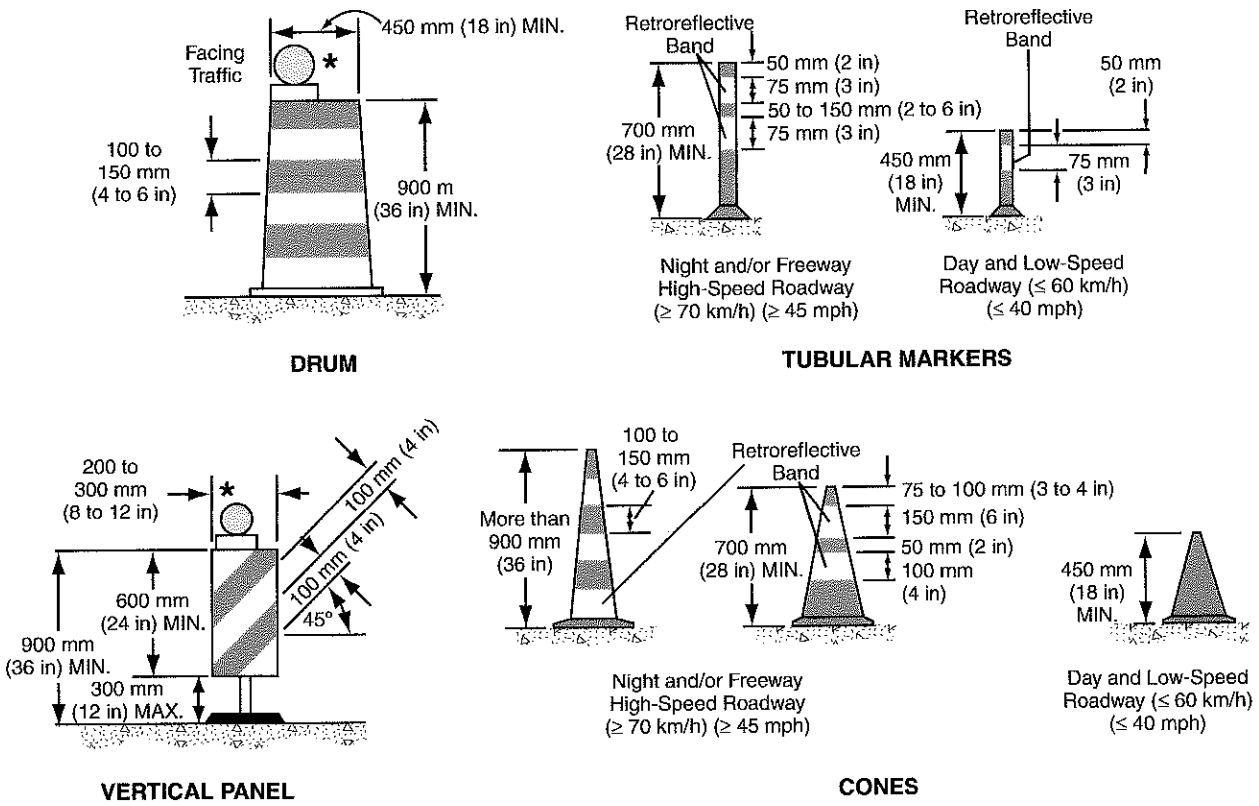

* Warning lights (optional)

Note: If drums, cones, or tubular markers are used to channelize pedestrians, they shall be located such that there are no gaps between the bases of the devices, in order to create a continuous bottom, and the height of each individual drum, cone, or tubular marker shall be no less than 900 mm (36 in) to be detectable to users of long canes.

Section 6F.60 Tubular Markers

Standard:

Tubular markers (see Figure 6F-7, Sheet 1 of 2) shall be predominantly orange and shall be not less than 450 mm (18 in) high and 50 mm (2 in) wide facing road users. They shall be made of a material that can be struck without causing damage to the impacting vehicle.

Tubular markers shall be a minimum of 700 mm (28 in) in height when they are used on freeways and other high-speed highways, on all highways during nighttime, or whenever more conspicuous guidance is needed.

For nighttime use, tubular markers shall be retroreflectorized. Retroreflectorization of 700 mm (28 in) or larger tubular markers shall be provided by two 75 mm (3 in) wide white bands placed a maximum of 50 mm (2 in) from the top with a maximum of 150 mm (6 in) between the bands.

Guidance:

Tubular markers should not be used for pedestrian channelization or as pedestrian barriers in TTC zones on or along sidewalks unless they are continuous between individual devices and detectable to users of long canes.

Tubular markers have less visible area than other devices and should be used only where space restrictions do not allow for the use of other more visible devices.

Tubular markers should be stabilized by affixing them to the pavement, by using weighted bases, or weights such as sandbag rings that can be dropped over the tubular markers and onto the base to provide added stability. Ballast should be kept to the minimum amount needed.

***Figure 6F-7. Channelizing Devices** (Sheet 2 of 2)*

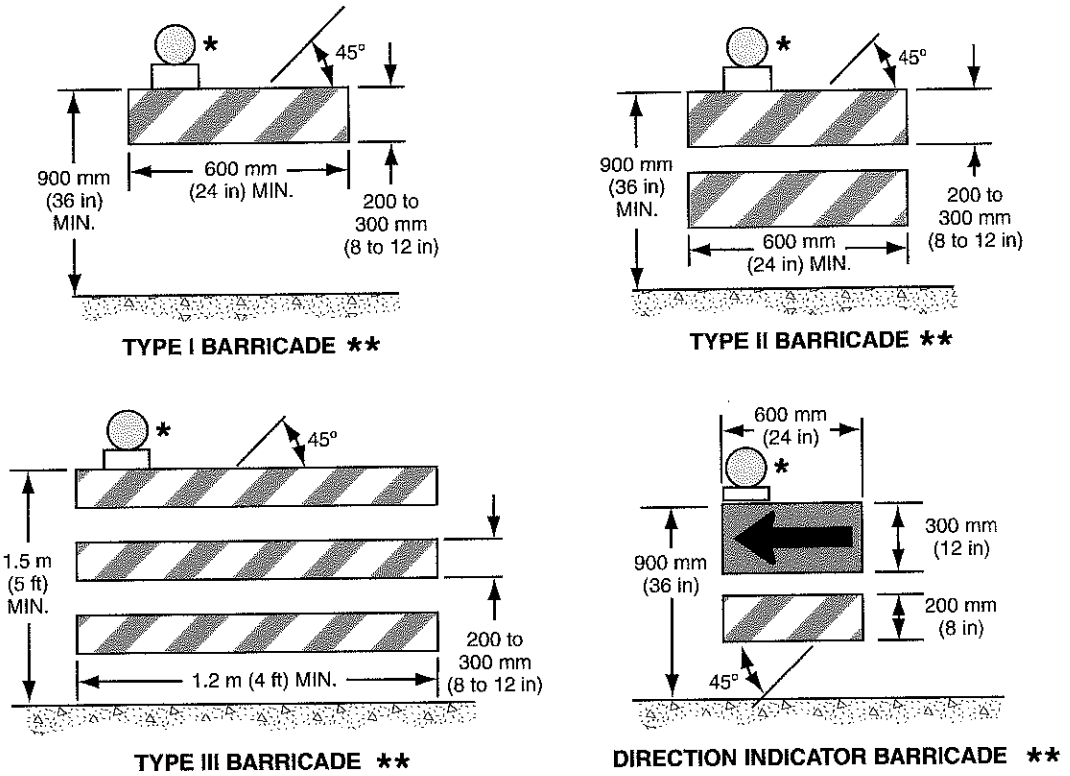

* Warning lights (optional)
** Rail stripe widths shall be 150 mm (6 in), except that 100 mm (4 in) wide stripes may be used if rail lengths are less than 900 mm (36 in). The sides of barricades facing traffic shall have retroreflective rail faces.

Note: If barricades are used to channelize pedestrians, there shall be continuous detectable bottom and top rails with no gaps between individual barricades to be detectable to users of long canes. The bottom of the bottom rail shall be no higher than 150 mm (6 in) above the ground surface. The top of the top rail shall be no lower than 900 mm (36 in) above the ground surface.

Option:

Tubular markers may be used effectively to divide opposing lanes of road users, divide vehicular traffic lanes when two or more lanes of moving motor vehicle traffic are kept open in the same direction, and to delineate the edge of a pavement drop off where space limitations do not allow the use of larger devices.

Standard:

When a noncylindrical tubular marker is used, it shall be attached to the pavement in a manner such that the width facing road users meets the minimum requirements.

A tubular marker shall be attached to the pavement to display the minimum 50 mm (2 in) width to the approaching road users.

Section 6F.61 Vertical Panels

Standard:

Vertical panels (see Figure 6F-7, Sheet 1 of 2) shall be 200 to 300 mm (8 to 12 in) in width and at least 600 mm (24 in) in height. They shall have orange and white diagonal stripes and be retroreflectorized.

Vertical panels shall be mounted with the top a minimum of 900 mm (36 in) above the roadway.